Frame packing ADEO -MILO prof 016/30 70x100 (FRAME MILO SILVER /OAK/BLACK/WHITE 70x100 cm INSPIRE)

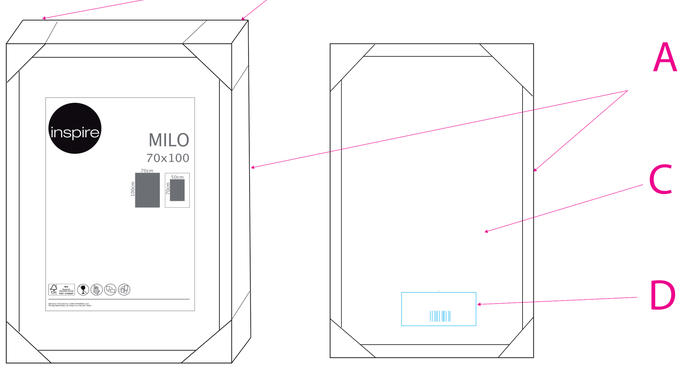

3 pcs

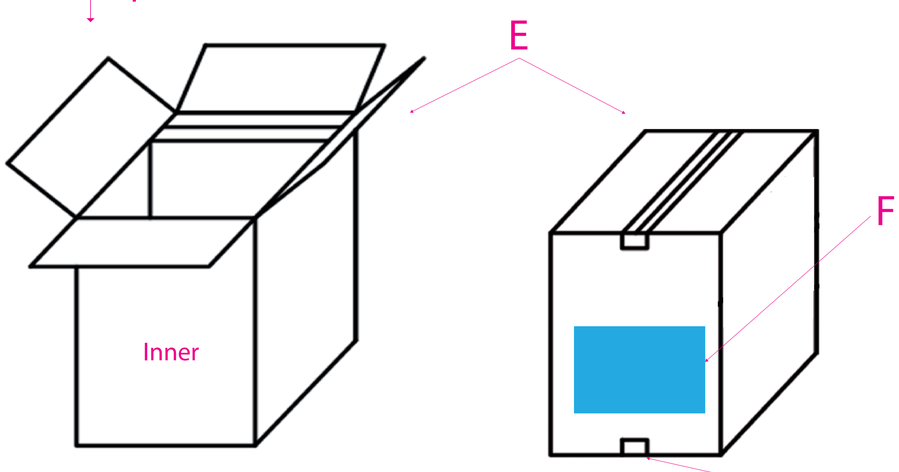

2x Inner

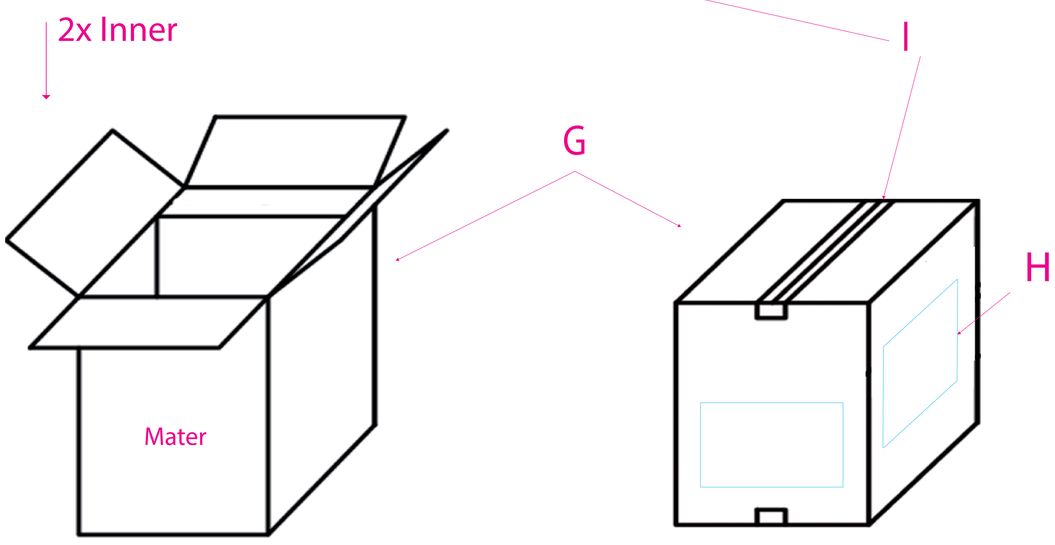

5x Master

A-Foto frame 70x100 cm
B- 30 cardboard corner (mm) - 4 pcs.
C- Polyolefin film
D- Label 60x100 mm (with frame bar code)
on foil
E- Inner carton Fefco 201 dim. ext. 730x100x1030 [mm]
(Inner 70x100) Wave B brown / brown 350g / m2
3 frames in a carton
F - Label 60x100 mm 1 item
G- Master carton Fefco 201 dim. ext. 742x228x1045 [mm]
(Master 70x100) Wave BC brown / brown 650g / m2
2 Inner cartons in a Master carton
H- Label 100x150 mm 2 pcs
I- Tape for gluing cardboard boxes
J- Wooden pallet EPAL 1200 x 800 [mm]
K- Spacers from a plate to be secured
top and bottom of the pallet load
L- Angle of solid cardboard 4 pcs on each side of the pallet
Ł- Teśma PP- for securing pallet load
minimum 2 stripes on each side
M- stretch film - minimum 2 times
N- Label 150x100mm 2 pcs
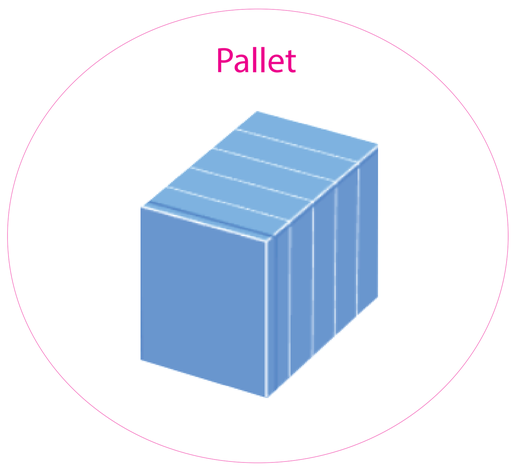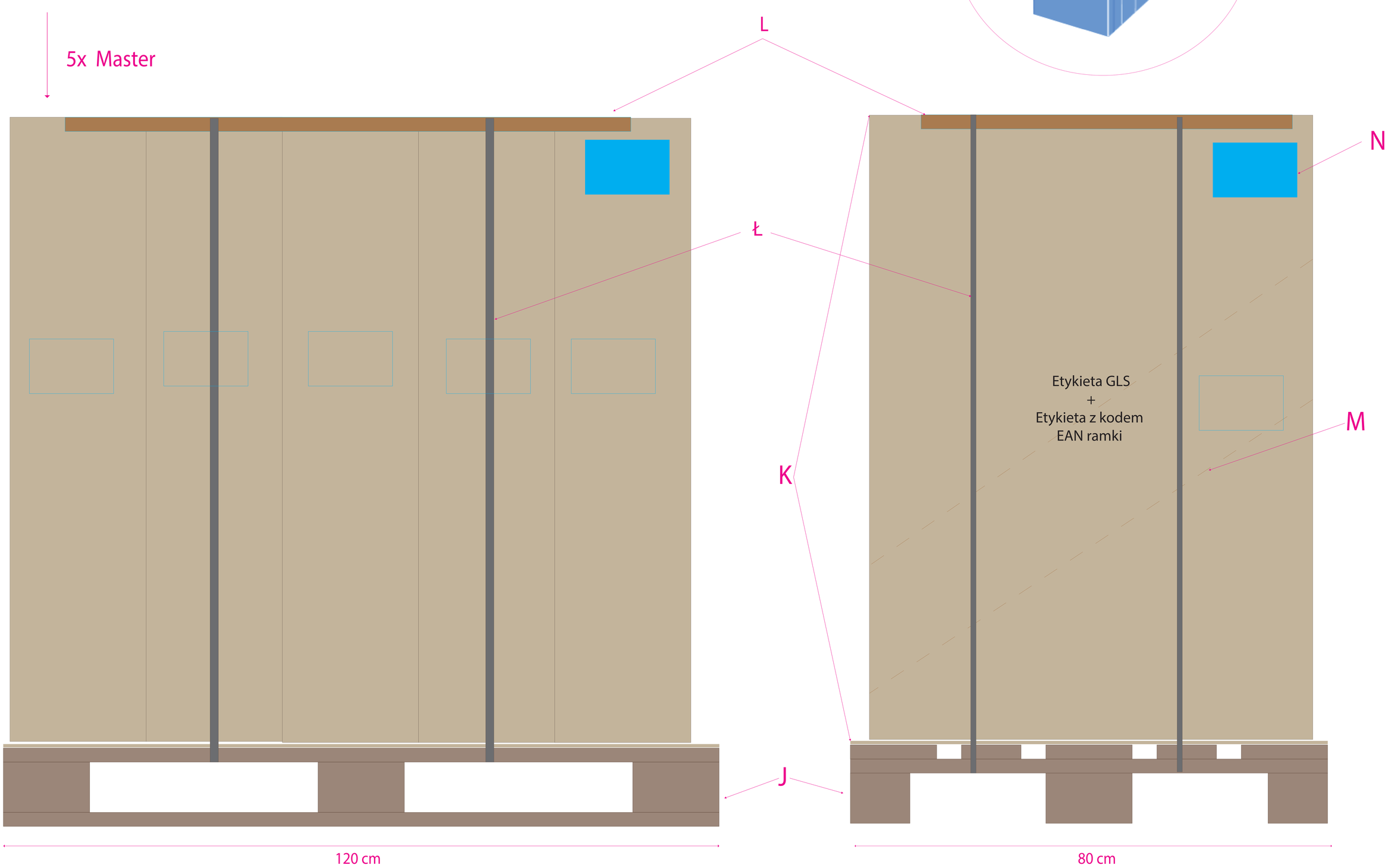
Quantity of product on a pallet 30 pcs
Quantity of Inner Cartons on a pallet 10 pcs.
Quantity of Master Cartons on a pallet 5 pcs